49S78-05210 / 49S78-05220

Actuator settings (Kpa)	
49S78-05220	TD05H-06*18G(8.0cm2)
P1 @ 1mm	50.7
P2 @ 5mm	66.7

Actuator settings (Kpa)	
49S78-05210	TD05H-06*18G(8.0cm2)
P1 @ 1mm	87.5

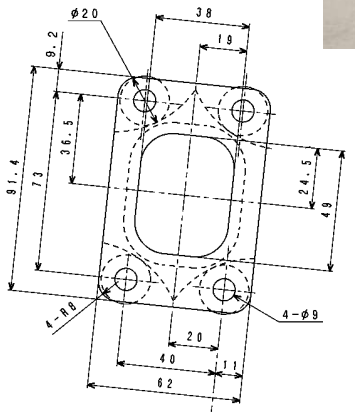

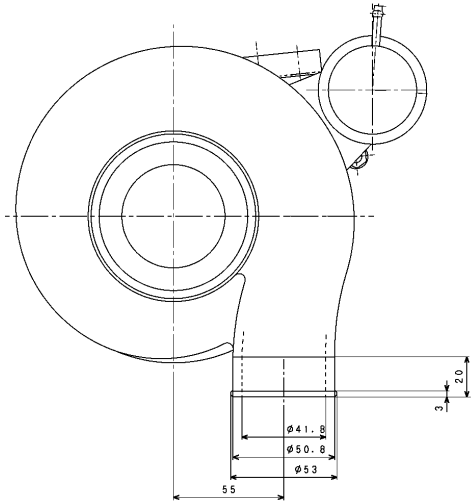

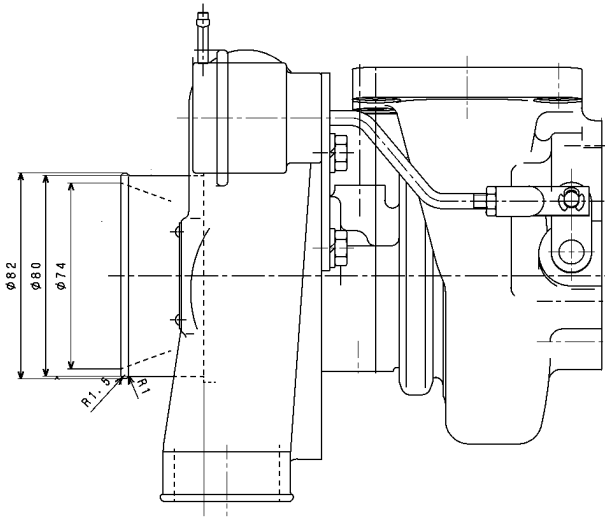

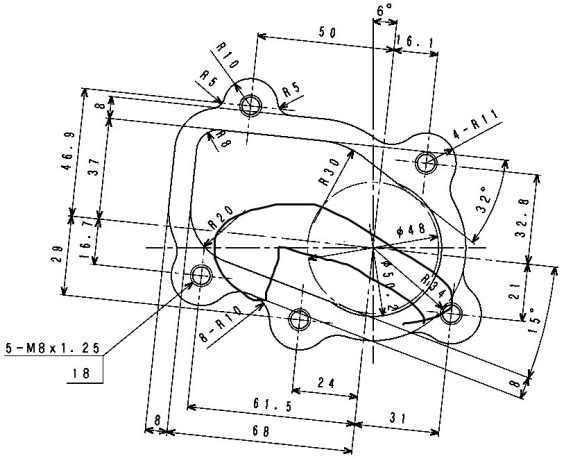

© 2012 MITSUBISHI HEAVY INDUSTRIES, LTD. All Rights Reserved.